Roof bar kit ID. Buzz Cargo 22-, 3 bars

MODUL-SYSTEM **RR560033000**

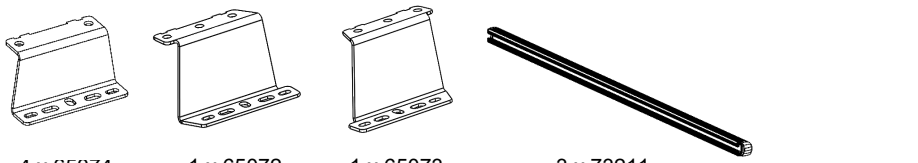

4 x 65074 | 1 x 65072 | 1 x 65073 | 3 x 73211

6 x R6283 | 12 x M8x16 | 12 x M8 | 6 x M8x25 | 6 x R6288 | R6600

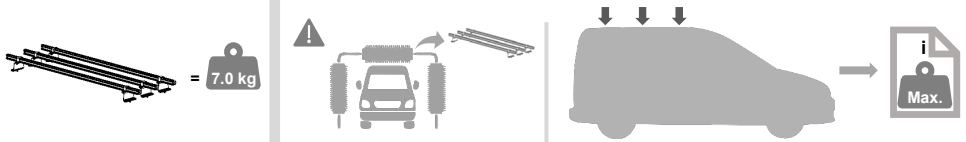

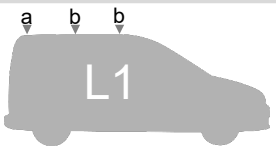

1

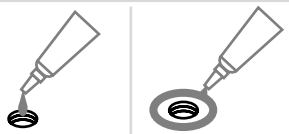

a

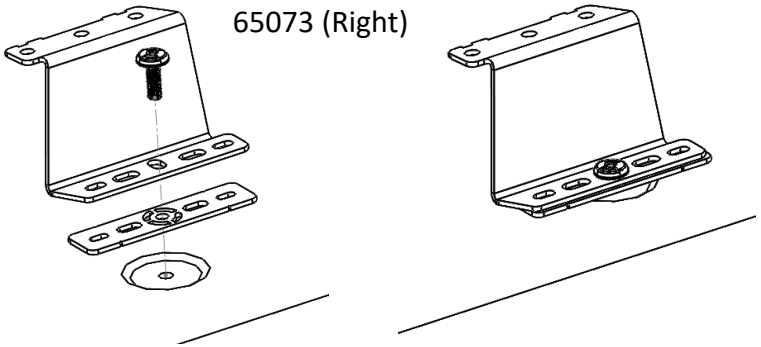

b

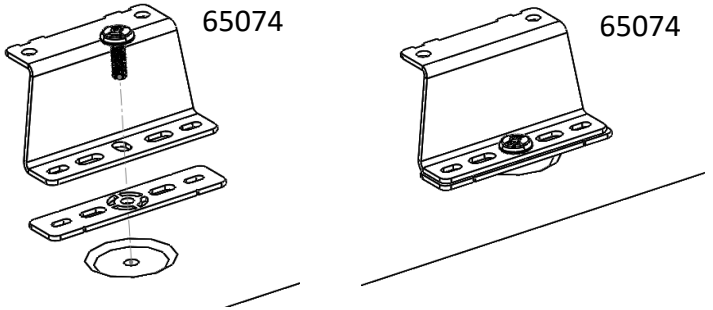

2

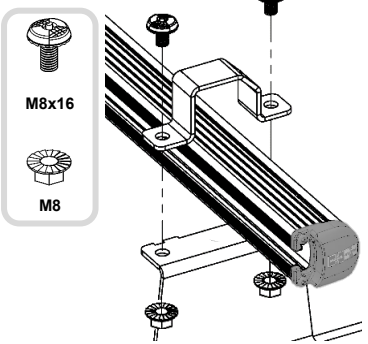

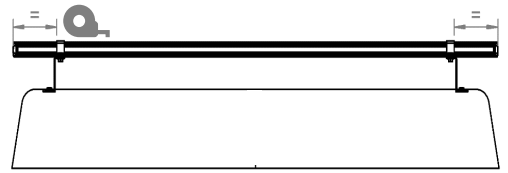

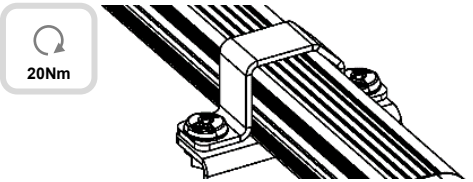

3

a

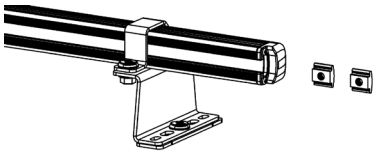

b

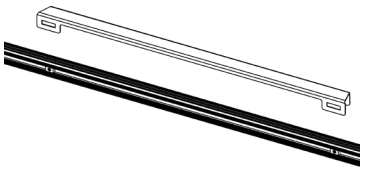

c

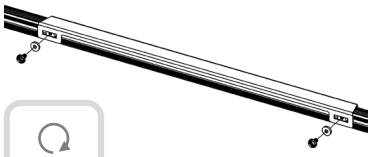
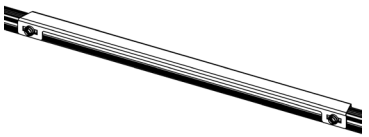
d